CAVITIES-TOOLING

Cavity-Tooling:12B-3

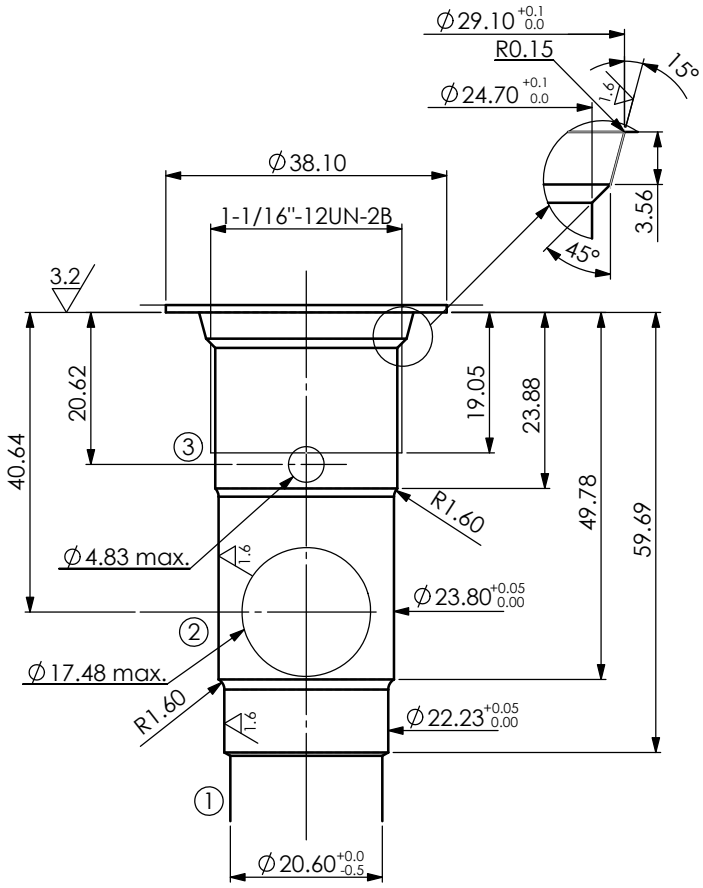

◎	0.05	A

THREAD AND
ALL DIAMETERS

UNIT:mm

UNIT:mm